TacTouch, Inc.
Innovative Push Button Control

Low Voltage Momentary Wall Switch for Latching Relays
TT-G Series

Description

TacTouch TT-G Decorator- style low voltage momentary switches are designed to control the latching coils on General Electric RR7 and RR9, Wattstopper HDR or Intelligrent Lighting Controls 2R7 and 2R9 lighting control relays. These switches are an improved version of the traditional low voltage switch that incorporates reliable technology and easy to label pushbuttons into a single gang switch box. The TT-G switches are available in 2, 4 or 6 pushbutton configurations in white. Consult TacTouch for other colors. LED in pushbutton illuminates to indicate relay status when connected to auxiliary contacts on GE RR9, Wattstopper HDR or ILC 2R9 relay and power source (with the exception of the TT-G6).

2-pushbutton
white

4-pushbutton
ivory

6-pushbutton
ivory

Features

- Momentary ON pushbutton controls on-coil and momentary OFF pushbutton controls off-coil on relay
- Switch provides user with excellent tactile feel
- Clear switch caps are removable and accept 1/2" x1/2" transparency with user defined label - changes are easy
- Switch cap labels can be changed without removing switch enclosure
- Low power blue LED for local status of GE RR9 Relay
- Uses standard Decorator-style wall plate (not included)
- Fits side-by-side for double & multi-gang applications
- Provides normally open momentary switches
- Class 2, low voltage
- Contractor-friendly removable terminal block makes wiring a snap.

Labeling is a snap!
No more long lead times waiting for expensive engraved switches

Remove clear cap cover with Cap Puller Tool or small flat blade screw driver.

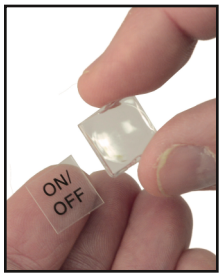

Remove unwanted transparency from clear cap, print desired text on transparency and trim to 1/2" x 1/2" and place in clear cap cover

Snap clear cap back onto switch...quick and simple!

Electrical contractors prefer the TT-G removable terminal block over the competition

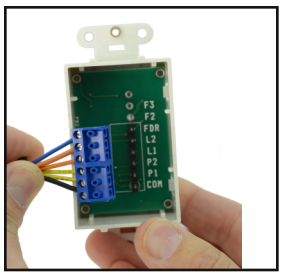

See our How-To video at: www.tactouch.com/Resources

Electrical

- Control rating: 24V, up to four relays maximum
- Can activate up to four RR7/9 or HDR or 2R7/9 relays in parallel. Contact factory if you need to control more than four relays in parallel.
- Solid-state momentary switch rated for 1,000,000 activations
- LED rated for 100,000 operating hours
- LED current requirement: 0.01A
- LED voltage requirement: half-wave 24VAC
- Wire size: 18-24 AWG

Environmental

- Operating Temperature 32-158 Deg. F, 0-70 Deg. C
- 10 - 90% Relative Humidity, non-condensing
- For Indoor Use

Mechanical

Dimensions same for TT-G2, TT-G4 and TT-G6

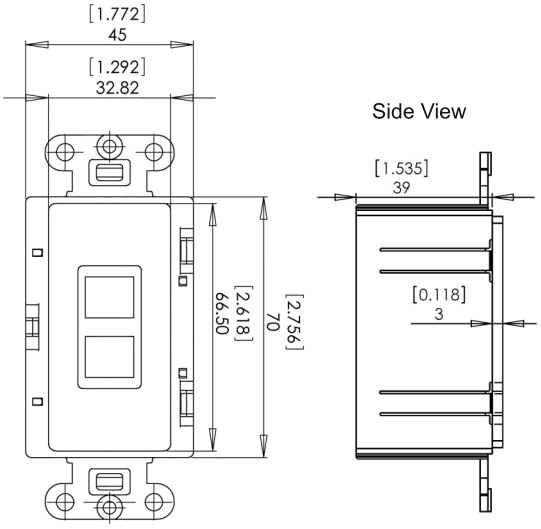

Wiring to General Electric RR7/RR9 and Wattstopper HDR Relay

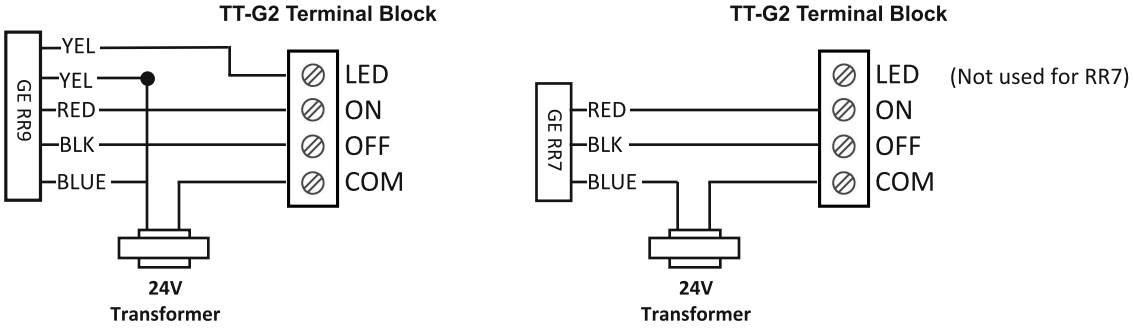

Watttstopper HDR Relay uses same wiring diagram as GE RR9 relay

Wiring to Intelligent Lighting Controls 2R7 and 2R9 Relay

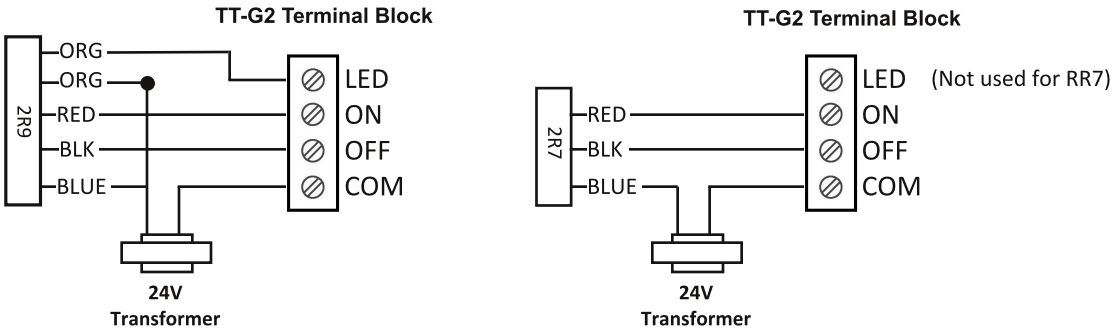

Wiring

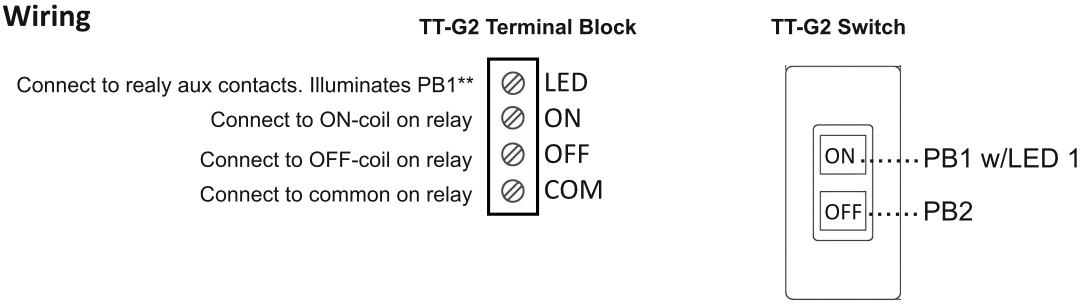

Wiring

TT-G4 Terminal Block

Connect to relay aux contacts. Illuminates PB1**	LED1
Connect to ON-coil on relay controlled by PB1*	ON1
Connect to OFF-coil on relay controlled by PB3*	OFF1
Connect to relay aux contacts. Illuminates PB2**	LED2
Connect to ON-coil on relay controlled by PB2*	ON2
Connect to OFF-coil on relay controlled by PB4*	OFF2
Connect to common on relay	COM

TT-G4 Switch

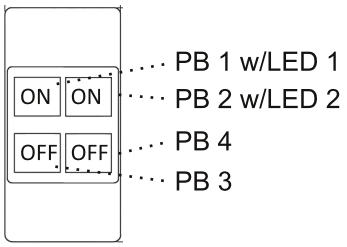

TT-G6 Terminal Block

Connect to relay aux contacts. Illuminates PB1**	LED1
Connect to ON-coil on relay controlled by PB1*	ON1
Connect to OFF-coil on relay controlled by PB2*	OFF1
Connect to relay aux contacts. Illuminates PB3**	LED2
Connect to ON-coil on relay controlled by PB3*	ON2
Connect to OFF-coil on relay controlled by PB4*	OFF2
Connect to relay aux contacts. Illuminates PB5**	LED3
Connect to ON-coil on relay controlled by PB5*	ON3
Connect to OFF-coil on relay controlled by PB6*	OFF3
Connect to common on relay	COM

TT-G6 Switch

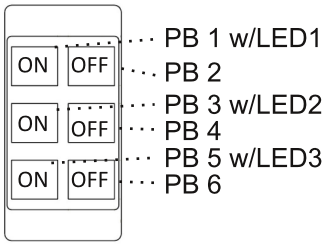

* For TT-G4, it is more intuitive to use PB1 as ON and PB3 as OFF for one zone of control and PB2 as ON and PB4 as OFF for the other zone
** Not used on RR7 relay because it does not have aux contacts

General Notes:

1- The TT-G series does not require diode on control transformer, however, if the diode is installed, it must be installed according to GE RR7 wiring diagram for TT-G to work. To verify, voltage measured on "ON 1" terminal with respect to "Common (-)" terminal of TT-G switch should be positive. If not, reverse diode connected to relay control transformer.

2- The GE RR7and RR9, Wattstopper HDRandILC 2R7 and 2R9 relays are momentary latching relays. The TT-G switches are designed to provide a momentary pulse to the relays.

Ordering Instructions **Example: TT-G2-W**

TT-G_ (# of Pushbuttons) - _ (Color) Call for other color options

2 W = White

4

6

TacTouch, Inc.

Innovative Push Button Control